Home Audio System
MHC-GT7DW

The following explains how to use this home audio system.

Listening to music from an Internet streaming service (music service)

Listening to music from an Internet streaming service (Chromecast built-in)

Spotify Connect

Listening to music with multiple home audio systems

Setting your PC for operating from a smartphone, iPhone, etc. as a controller (Windows 8.1)

Listening with multiple home audio systems

Listening to music on a PC via a network (Windows 8.1) (Windows Media Player)

Setting your PC as a DLNA server and controller (Windows 8.1)

Listening to music on a PC via a network (Windows 8.1) (Windows Media Player)

Listening to music on a PC via a network (Windows 7) (Windows Media Player)

Setting your PC as a DLNA server and controller (Windows 7)

Listening to music on a PC via a network (Windows 7) (Windows Media Player)

Listening to music on a PC via a network (“Sony | Music Center for PC”)

Listening to music on a PC via a network (“Sony | Music Center for PC”)

Listening to music on a PC via a network (“Sony | Music Center for PC” with SongPal operation)

Listening to music on an Xperia by operating the Music application

Listening to music with the Music application (Xperia)

About home network (DLNA)

DLNA (Digital Living Network Alliance)

Connecting methods other than the descriptions in the Operating Instructions/Wi-Fi Startup Guide

Connecting to a wired network

Connecting the home audio system to a Wi-Fi network using a PC connected wirelessly (Modern UI)

Connecting to a Wi-Fi network using a PC connected wirelessly (Windows 7/Windows 8.1)

Connecting to a Wi-Fi network using a PC connected wirelessly (Mac)

Connecting to a Wi-Fi network using an iPhone/iPod touch

Software update

Updating the pre-installed software

Update method 1: Automatic update via the Internet

Update method 2: Manual update via the Internet

Update method 3: Manual update via a USB flash drive

Searching for the latest software via a network connection

Manual update via a USB flash drive (when the update via a network has failed)

Software information

Important information on software

4-684-461-11(3) Copyright 2016 Sony Corporation

Home Audio System
MHC-GT7DW

Listening to music from an Internet streaming service (Chromecast built-in)

You can enjoy music from various streaming services offered on the Internet via your smartphone, iPhone, etc. with SongPal installed.
You need to download a Chromecast-enabled music service application.
If you have already installed a Chromecast-enabled application, go to step 7. If you have not yet set up Chromecast built-in, follow the steps below.
For details about Chromecast built-in, refer to the following URL:
http://www.google.com/cast/audio/learn/
The specification and design of the application may change without notice.

1 Tap [SongPal] on your smartphone, iPhone, etc. to start up the application.

SongPal

2 Tap [MHC-GT7DW].

3 Tap [Settings].

4 Tap [Chromecast built-in].

5 **Tap [Learn how to Cast].**

6 **See the instructions, then find and install a Chromecast-enabled application on your smartphone/iPhone.**

7 **Launch the Chromecast-enabled application.**

8 **Tap the Cast button, and then tap [MHC-GT7DW].**

9 **Select and start playing a track on the Chromecast-enabled application, and adjust the volume.**

Music will be heard from the home audio system.

To enjoy a more dynamic sound

Place your fingers over the parts ① , then pull the grille of the subwoofer and speakers to remove them.*

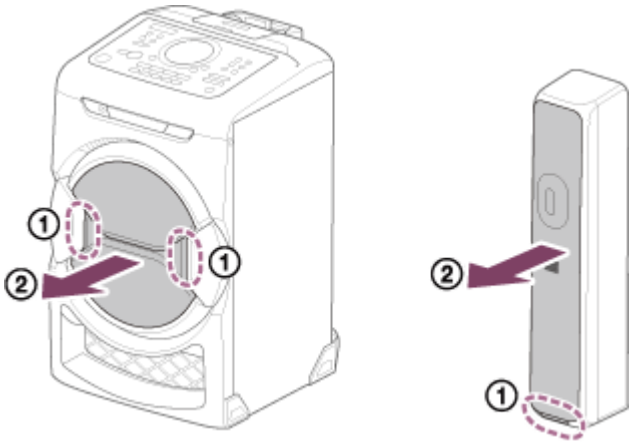

* After removing the grilles, do not touch the exposed part of the subwoofer and speakers, and keep the removed grilles on a flat surface to prevent distortion.

Note

- Depending on the country or region, music services and their period of availability may differ. Separate registration is required for certain services. An update of the device may be required.
- In some cases, the home audio system may need to be activated by a music service. If you activate the home audio system, you can use music services. Follow the instructions on the music service's application or SongPal.
- Services offered by third parties may be changed, suspended, or terminated without prior notice. Sony bears no responsibility for this.

4-684-461-11(3) Copyright 2016 Sony Corporation

Home Audio System
MHC-GT7DW

Spotify Connect

Use your phone, tablet or computer as a remote control for Spotify. Go to spotify.com/connect to learn how.

Note

- Depending on the country or region, the Spotify service availability may differ.

Hint

- When “Spotify Connect” is activated, the Connect icon ( ) lights up.

4-684-461-11(3) Copyright 2016 Sony Corporation

Home Audio System
MHC-GT7DW

Setting your PC for operating from a smartphone, iPhone, etc. as a controller (Windows 8.1)

By operating from a controller such as smartphone, iPhone, etc. on your home network, you can enjoy music stored in a Windows 8.1 PC on your home network with the home audio system.
To operate the Windows 8.1 PC after downloading SongPal on the smartphone, iPhone, etc., follow the steps below.

1. **Click or tap ⊙ at the bottom-left of the Start screen.**

2. **Select [Windows Media Player].**

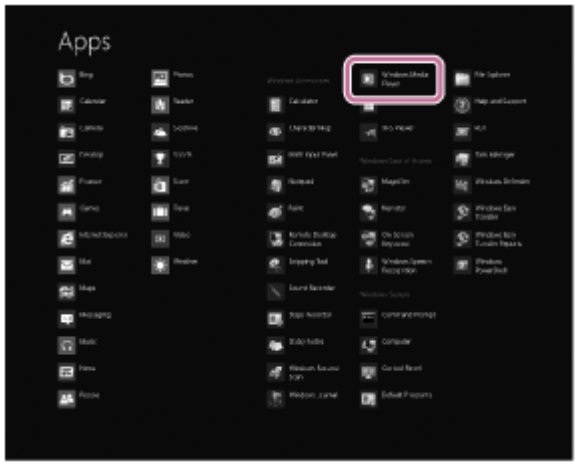

3. **Click or tap [Stream], then select [More streaming options].**

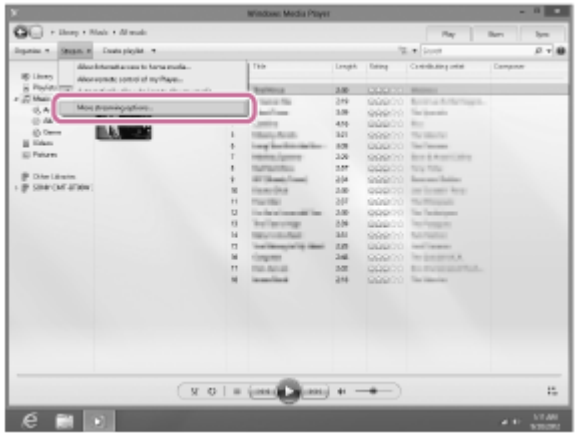

If [More streaming options] does not appear, select [Turn on media streaming...]. Then select [Turn on media streaming] on the [Media streaming options] screen.

4. **If all devices are allowed, select [Next].**

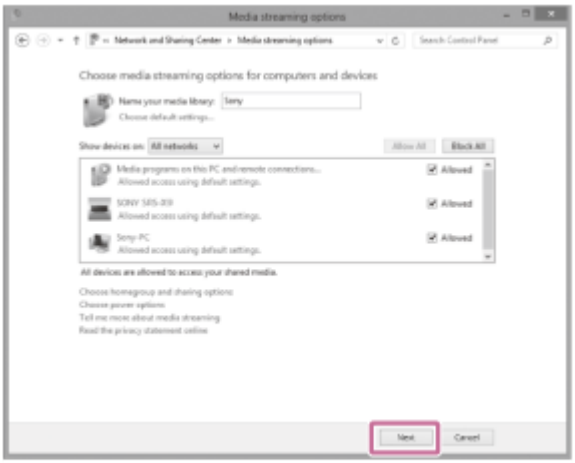

If not all devices are allowed, select [Allow All], then the [Allow All Media Devices] screen appears.
Select [Allow all PCs and Media Devices].

5 **Check that [Music] is set to [Shared], then select [Next].**

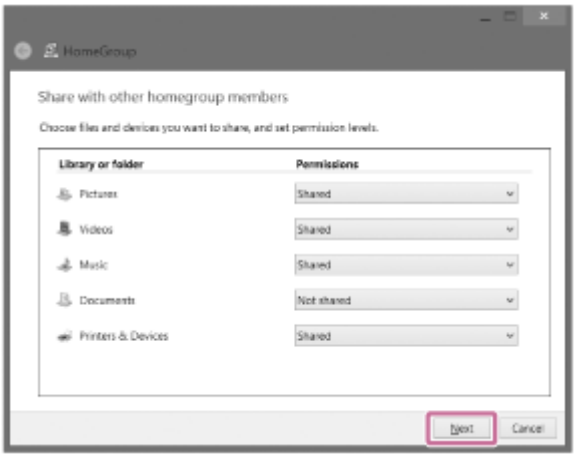

6 **Select [Finish] to close the screen.**

7 **Select [Stream], then check that [Automatically allow devices to play my media...] has been checked.**

The setting is now complete. You can listen to music stored in your PC, using your smartphone, iPhone, etc.

4-684-461-11(3) Copyright 2016 Sony Corporation

Home Audio System
MHC-GT7DW

Listening with multiple home audio systems

You can enjoy listening to your favorite music in various styles by wireless home audio system combinations.

Compatible models

For more details about compatible models for Wireless Stereo function, refer to the following URL:
http://sony.net/nasite/

Features

The Wireless Multi-room function is available. To cancel a function, operate SongPal.

Note

- To play back music stored on a PC, the server (DMS) function is required on the PC. For more information, refer to the operating instructions for the PC.
- Only music files and video files on the server device of the home network can be played back.

Playing music in more than one room at the same time (Wireless Multi-room)

Wireless Multi-room

By grouping home audio systems, you can fill your rooms with same music simultaneously.
For music stored on a PC or NAS, you can also listen to different songs from each home audio system.*
You can save the settings of your favorite home audio system group.
For more details on the Wireless Multi-room function (such as grouping and group playback), refer to the following URL:
http://info.songpal.sony.net/help/

* Different songs stored on a smartphone or tablet cannot be output from each home audio system.

4-684-461-11(3) Copyright 2016 Sony Corporation

Home Audio System
MHC-GT7DW

Setting your PC as a DLNA server and controller (Windows 8.1)

Windows 8.1 supports DLNA1.5. A Windows 8.1 PC can be used as both a DLNA server and controller.
By operating from a Windows 8.1 PC, you can enjoy music stored in a DLNA server (including a Windows 8.1 PC) on your home network with the home audio system if you set the following.
If you download SongPal to your smartphone, iPhone, etc. and operate a Windows 8.1 PC, perform “Setting your PC for operating from a smartphone, iPhone, etc. as a controller (Windows 8.1).”

1. **Move the mouse pointer to the top-right (or bottom-right) corner of the screen to display the charms, then select [Settings].**

   In the case of a touch panel, display the charms by swiping from the right side of the screen to the center, then select [Settings].

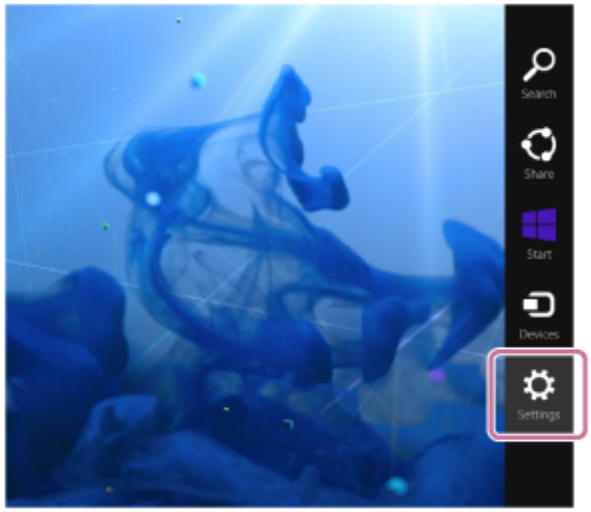

2. **Select [Change PC settings].**

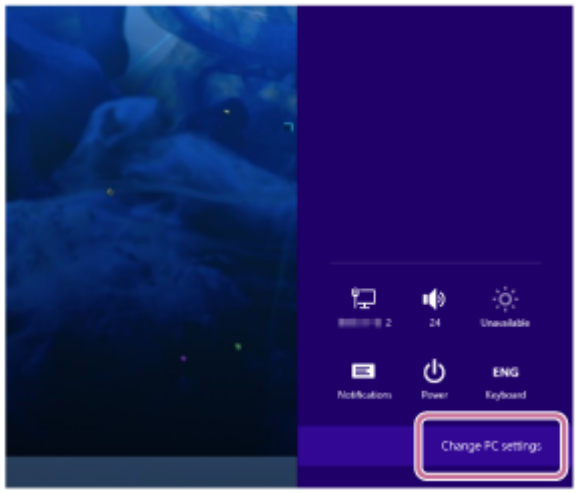

3. **Select [Network].**

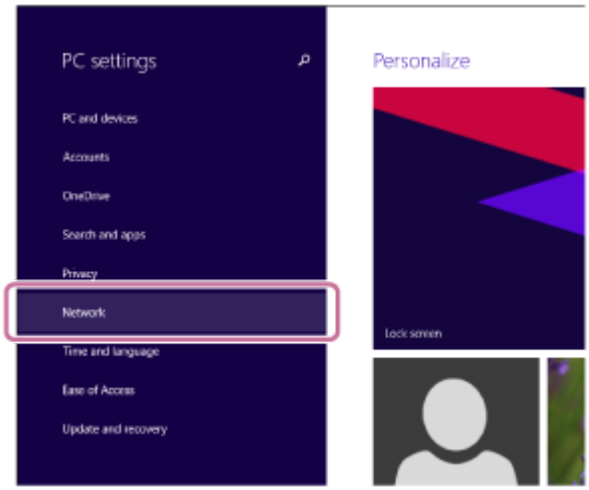

4 **Select [Connections], and then select the icon with [Connected] using or .**

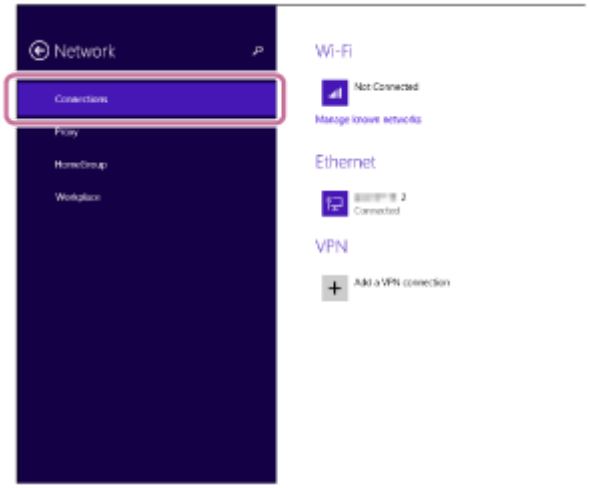

5 **Turn on [Find devices and content].**

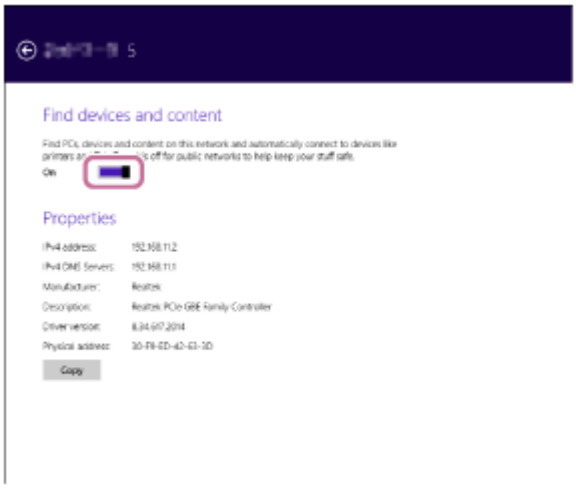

4-684-461-11(3) Copyright 2016 Sony Corporation

Home Audio System
MHC-GT7DW

Listening to music on a PC via a network (Windows 8.1) (Windows Media Player)

You can use a PC as a controller (operating device).
Music can be played back by using the “Play To” function, after starting Windows Media Player. Follow the instructions on the PC screen to operate.

1 Connect the home audio system and the PC to the same network.

Connect the home audio system and the PC to the same SSID of the wireless router.
The NETWORK indicator lights up in white when the home audio system is connected to your network.

2 Touch the NETWORK/ ━ WPS key on the home audio system.

The home audio system enters the NETWORK function.

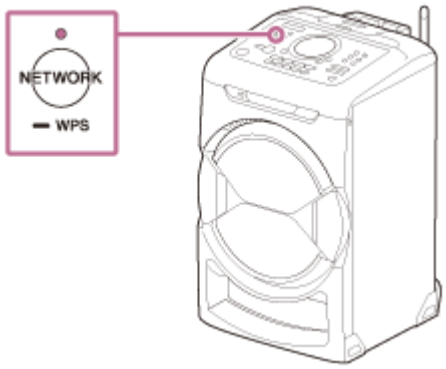

The home audio system can also be switched to the NETWORK function automatically instead of touching the NETWORK/ ━ WPS key, by starting Windows Media Player then playing back music using the “Play To” function.

3 Click or tap ⓓ at the bottom-left of the Start screen.

4 Select [Windows Media Player].

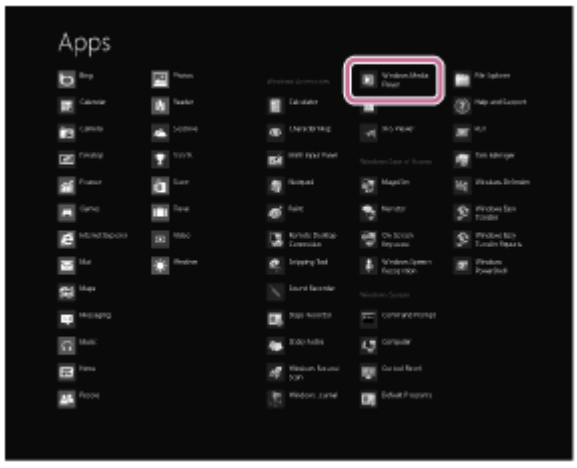

5 Right-click or tap and hold a song to be played.

6 Select [Play To] from the menu.

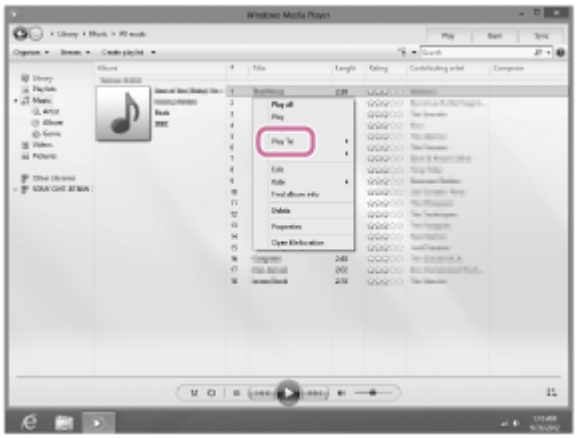

The device list appears.

7 **Tap [MHC-GT7DW].**

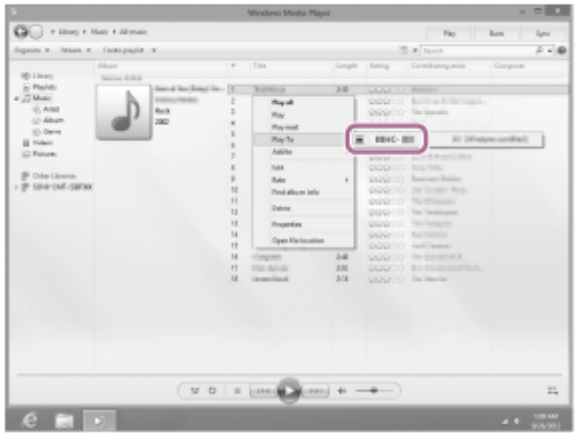

8 **Select a song to play and adjust the volume.**

The selected song will be heard from the home audio system.

To enjoy a more dynamic sound

Place your fingers over the parts ① , then pull the grille of the subwoofer and speakers to remove them.*

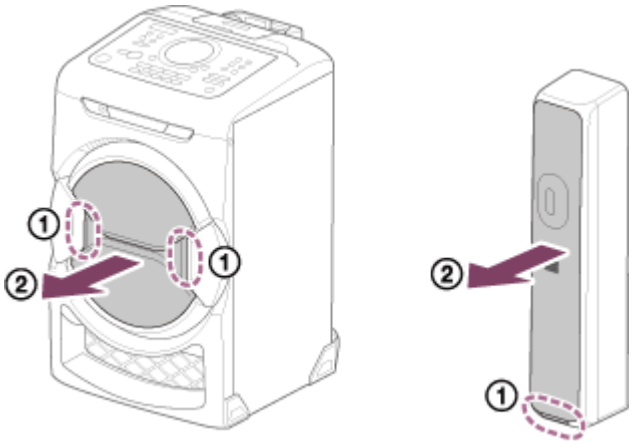

* After removing the grilles, do not touch the exposed part of the subwoofer and speakers, and keep the removed grilles on a flat surface to prevent distortion.

Hint

- After SongPal is downloaded and installed to your smartphone/iPhone, you can use your smartphone/iPhone as a remote control to operate devices connected to the home audio system.

Note

- The procedure explained above is for guidance only. Normally, the volume levels on a PC and the home audio system do not synchronize. However, depending on the version of Windows Media Player installed on a PC or the PC's condition, the volume levels may synchronize.
- The home audio system can play MP3, WMA, AAC and WAV format files (only AAC files with the extension “.m4a,” “.mp4,” or “.3gp” can be played). Even if the bit rate and file format are supported, the playback of all files is not guaranteed. There may be a specification change.
- Files with DRM (Digital Rights Management) copyright protection cannot be played on the home audio system. To check if a WMA file is protected by DRM, right-click the file on the PC. If there is a [License] tab, the file is DRM-copyrighted.
- When you listen to music via a home network, it may take some time to start, since each DLNA-compatible device has to recognize the component currently used.
- Some content may not be playable with DLNA certified products.

4-684-461-11(3) Copyright 2016 Sony Corporation

Home Audio System
MHC-GT7DW

Setting your PC as a DLNA server and controller (Windows 7)

A Windows 7 PC can be used as both a DLNA server and controller.
By operating from a Windows 7 PC and DLNA controller on your home network, you can enjoy music stored in a DLNA server (including a Windows 7 PC) on your home network with the home audio system if you set the following.

1 Go to [Start]-[Control Panel], then select [Network and Sharing Center].

The [Network and Sharing Center] screen appears.
If the desired item does not appear in the display, try changing the Control Panel display type.

2 Select [Public network] under [View your active networks].

If the display shows other than [Public network], go to step 5 .

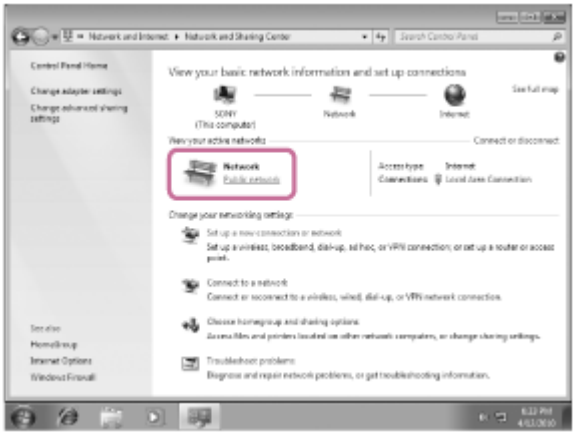

The [Set Network Location] screen appears.

3 Select [Home network] or [Work network] according to the environment in which the home audio system is used.

4 Follow the instructions that appear on the display according to the environment in which the home audio system is used.

When the setting is completed, in the [Network and Sharing Center] screen, confirm that the item under [View your active networks] has changed to [Home network] or [Work network].

5 Select [Change advanced sharing settings].

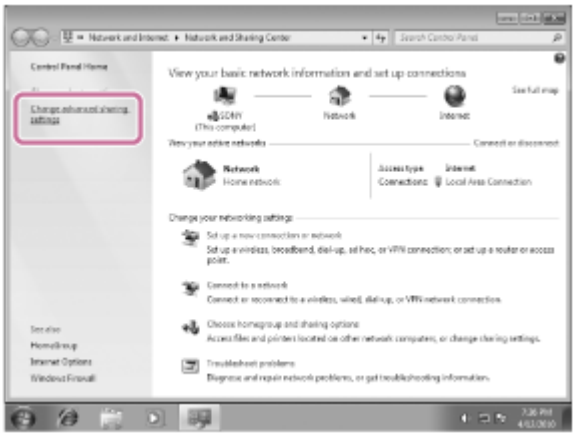

6 **Select [Choose media streaming options…] from [Media streaming].**

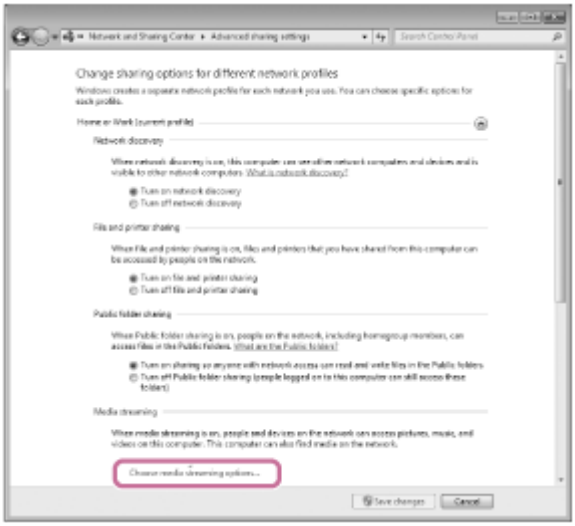

7 **If [Media streaming is not turned on] appears in the [Media streaming options] screen, select [Turn on media streaming].**

8 **Select [Allow All].**

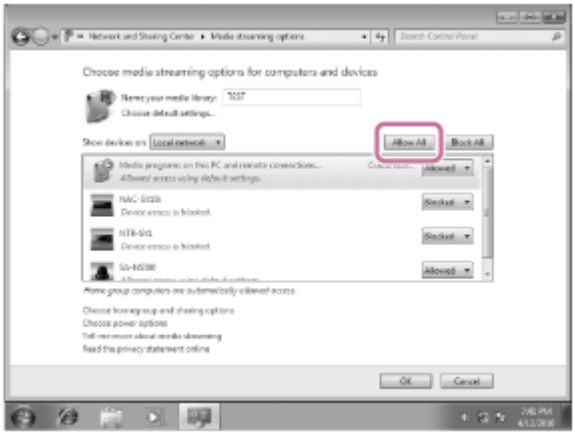

The [Allow All Media Devices] screen appears. If all the devices in the local network are allowed ([Allow]) to access your network, select [OK] and close the screen.

9 **Select [Allow all computers and media devices].**

10 **Select [OK] to close the screen.**

4-684-461-11(3) Copyright 2016 Sony Corporation

Home Audio System
MHC-GT7DW

Listening to music on a PC via a network (Windows 7) (Windows Media Player)

You can use a PC as a controller (operating device).
Music stored in the PC can be played back by simple operations with the “Play To” function of Windows 7, after starting Windows Media Player. Follow the instructions on the PC screen to operate.

1 Connect the home audio system and the PC to the same network.

Connect the home audio system and the PC to the same SSID of the wireless router.
The NETWORK indicator lights up in white when the home audio system is connected to your network.

2 Touch the NETWORK/ ━ WPS key on the home audio system.

The home audio system enters the NETWORK function.

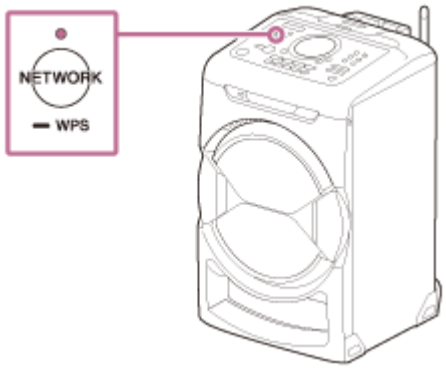

The home audio system can also be switched to the NETWORK function automatically instead of touching the NETWORK/ ━ WPS key, by starting Windows Media Player then playing back music using the “Play To” function.

3 Start [Windows Media Player] in the PC.

4 Right-click the song to be played.

5 Select [Play To] from the menu.

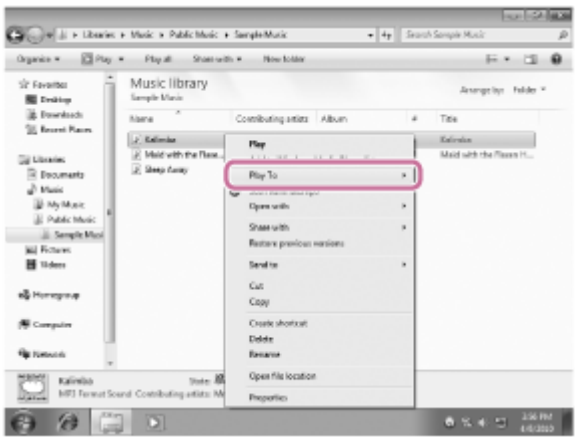

The device list appears.

6 **Tap [MHC-GT7DW].**

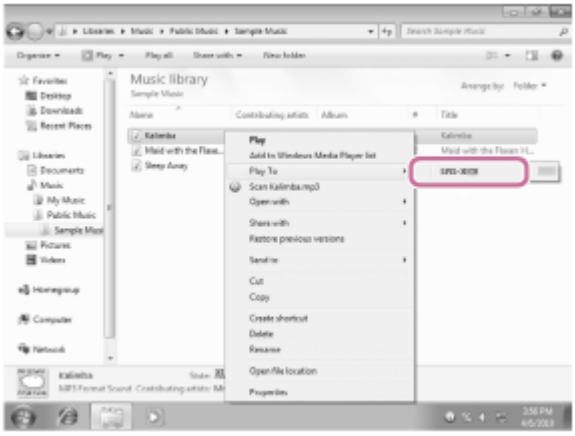

7 **Select a song to play and adjust the volume.**

The selected song will be heard from the home audio system.

To enjoy a more dynamic sound

Place your fingers over the parts ① , then pull the grille of the subwoofer and speakers to remove them.*

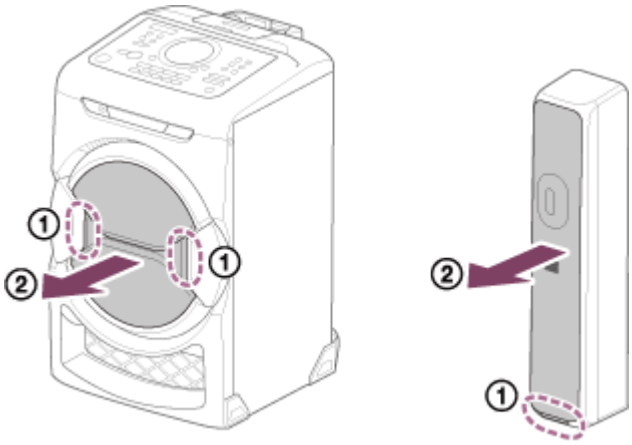

* After removing the grilles, do not touch the exposed part of the subwoofer and speakers, and keep the removed grilles on a flat surface to prevent distortion.

Hint

- After SongPal is downloaded and installed to your smartphone, iPhone, etc., you can use your smartphone, iPhone, etc. as a remote control to operate devices connected to the home audio system.

Note

- The home audio system can play MP3, WMA, AAC and WAV format files (only AAC files with the extension “.m4a,” “.mp4,” or “.3gp” can be played). Even if the bit rate and file format are supported, the playback of all files is not guaranteed. There may be a specification change.
- Files with DRM (Digital Rights Management) copyright protection cannot be played on the home audio system. To check if a WMA file is protected by DRM, right-click the file on the PC. If there is a [License] tab, the file is DRM-copyrighted.
- When you listen to music via a home network, it may take some time to start, since each DLNA-compatible device has to recognize the component currently used.
- Some content may not be playable with DLNA certified products.

4-684-461-11(3) Copyright 2016 Sony Corporation

Home Audio System
MHC-GT7DW

Listening to music on a PC via a network (“Sony | Music Center for PC”)

You can share music on your PC (server function) with the free application “Sony | Music Center for PC” installed on your PC. You can listen to music on your PC from the home audio system via a Wi-Fi network.

Install or update the latest version of “Sony | Music Center for PC” on your PC beforehand.
Access the following website to download the application. You may have to pay a communication fee, depending on your Internet contract.
http://www.sony.net/smc4pc/
For details how to install the application, follow the instructions on the website.

The specification and design of the application may change without notice.

1. **Connect the home audio system and a PC to the same network.**

   Connect the home audio system and the PC to the same SSID of your wireless router.
   The NETWORK indicator lights up in white when the home audio system is connected to your network.

2. **Touch the NETWORK/ ▬ WPS key on the home audio system.**

   The home audio system enters the NETWORK function.

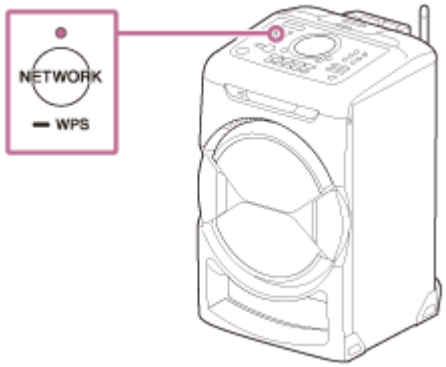

3. **Start “Sony | Music Center for PC” installed on the PC.**

4. **Select [Settings] from the [Tools] menu.**

5. **Click [Audio output settings] A and add a check mark to the check box for [Network device] B. Then, click [Settings...] C .**

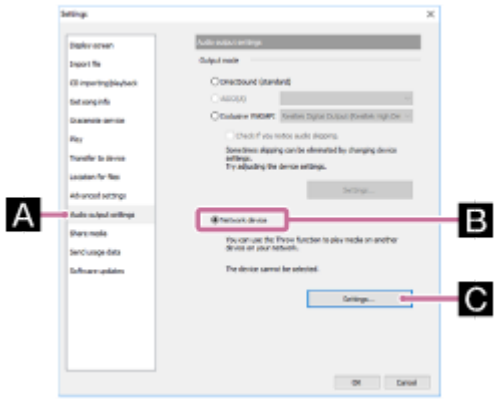

6 **Select [MHC-GT7DW xxxxxx (Sony Corporation)] from the list under [Select network device]. Then, click [OK] to close the screen.**

7 **Select a song to play and adjust the volume.**

The selected song will be heard from the home audio system.

To enjoy a more dynamic sound

Place your fingers over the parts ① , then pull the grille of the subwoofer and speakers to remove them.*

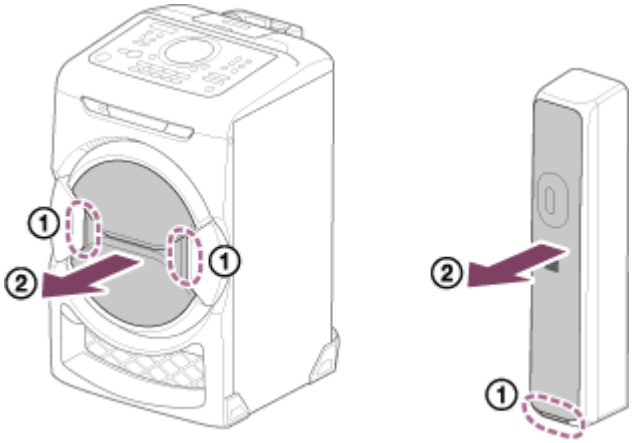

* After removing the grilles, do not touch the exposed part of the subwoofer and speakers, and keep the removed grilles on a flat surface to prevent distortion.

Note

- Before listening to music, connect your smartphone/iPhone installed with SongPal to the same network as used by the home audio system and PC.
- The home audio system can play MP3, WMA, AAC, WAV, FLAC, ALAC, AIFF, and DSD format files (only AAC files with the extension ".m4a," ".mp4," or ".3gp" are playable). Even if the bit rate and file format are supported, the playback of all files is not guaranteed. There may be a specification change.
- Files with DRM (Digital Rights Management) copyright protection cannot be played on the home audio system. To check if a WMA file is protected by DRM, right-click the file on the PC. If there is a [License] tab, the file is DRM-copyrighted.
- When you listen to music via a home network, it may take some time to start, since each DLNA-compatible device has to recognize the component currently used.
- Some content may not be playable with DLNA certified products.

4-684-461-11(3) Copyright 2016 Sony Corporation

Home Audio System
MHC-GT7DW

Listening to music on a PC via a network (“Sony | Music Center for PC” with SongPal operation)

You can share music on your PC (server function) with the free application “Sony | Music Center for PC” installed on your PC.
You can listen to music on your PC from the home audio system via a Wi-Fi network by using the SongPal installed on your smartphone, iPhone, etc. as a DLNA controller.

Install or update the latest version of “Sony | Music Center for PC” on your PC beforehand.
Access the following website to download the application. You may have to pay a communication fee, depending on your Internet contract.
http://www.sony.net/smc4pc/
For details how to install the application, follow the instructions on the website.

The specification and design of the application may change without notice.

1. **Connect the home audio system, a PC and a smartphone, iPhone, etc. with SongPal installed to the same network.**

   Connect the home audio system, the PC and the smartphone, iPhone, etc. to the same SSID of the wireless router.
   The NETWORK indicator lights up in white when the home audio system is connected to your network.

2. **Touch the NETWORK/ ▬ WPS key on the home audio system.**

   The home audio system enters the NETWORK function.

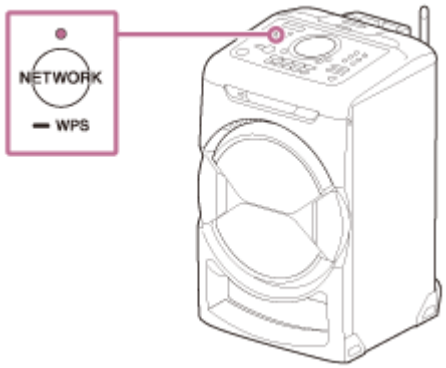

3. **Start “Sony | Music Center for PC” installed on the PC.**

4. **Select [Settings] from the [Tools] menu.**

5. **Click [Share media] A and add a check mark to the check box for [Share media with local network device] B . Then, input an arbitrary library name in the text box for [Library name:] C . Click [OK] to close the screen.**

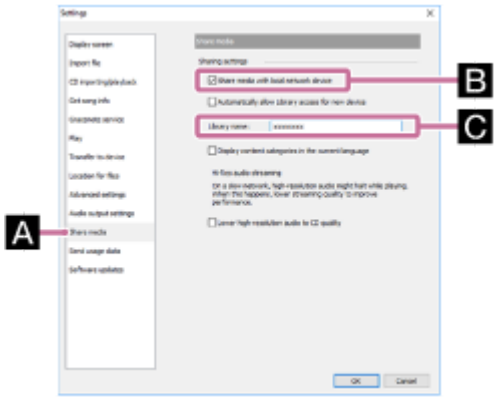

For details on the procedure, refer to [How to use] on the “Sony | Music Center for PC” support website.
http://www.sony.net/smc4pc/

6 Start up SongPal to select music on the PC.

Tap [SongPal] on your smartphone, iPhone, etc.

7 Tap [MHC-GT7DW].

8 Tap [Home Network].

9 Tap the library name checked in step 6 from the server list that appeared on the screen.

10 Tap [Music], then select a song from the list, and start playback.

The playback of the videos and photos are not supported.

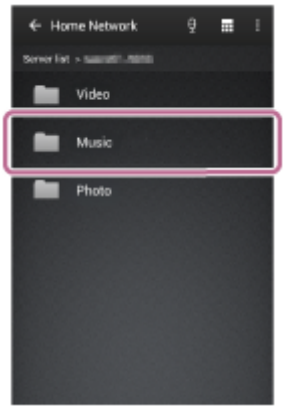

The selected song will be heard from the home audio system.

11 Adjust the volume using SongPal.

To enjoy a more dynamic sound

Place your fingers over the parts ① , then pull the grille of the subwoofer and speakers to remove them.*

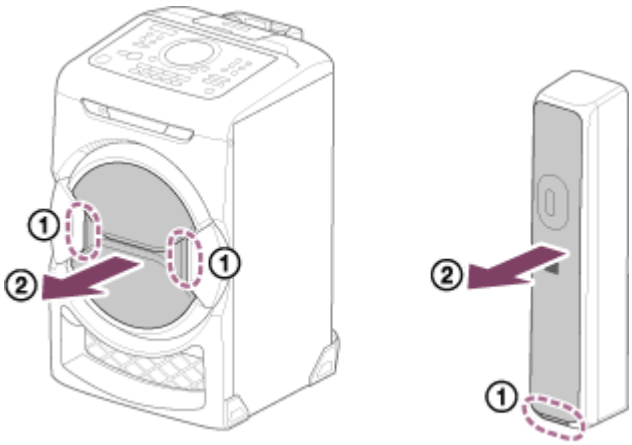

* After removing the grilles, do not touch the exposed part of the subwoofer and speakers, and keep the removed grilles on a flat surface to prevent distortion.

Note

- The home audio system can play MP3, WMA, AAC, WAV, FLAC, ALAC, AIFF, and DSD format files (only AAC files with the extension “.m4a,” “.mp4,” or “.3gp” are playable). Even if the bit rate and file format are supported, the playback of all files is not guaranteed. There may be a specification change.

- Files with DRM (Digital Rights Management) copyright protection cannot be played on the home audio system. To check if a WMA file is protected by DRM, right-click the file on the PC. If there is a [License] tab, the file is DRM-copyrighted.
- When you listen to music via a home network, it may take some time to start, since each DLNA-compatible device has to recognize the component currently used.
- Some content may not be playable with DLNA certified products.

4-684-461-11(3) Copyright 2016 Sony Corporation

Home Audio System
MHC-GT7DW

Listening to music with the Music application (Xperia)

Using the Music application, you can play music stored in an Xperia.
Do the following before starting.

- The Music application is pre-installed in your Xperia.
- Operations of the Music application are subject to change without notice. For details about how to use the Music application, refer to the operating instructions supplied with the Xperia.
- Your Xperia may need to disable [Auto-select wireless option] of [Throw settings]. For details, refer to the user guide of Xperia.
- Update the Android OS on your Xperia to the latest version before using it with the home audio system.

Hint

- Depending on the model, a music application installed in Xperia may be called as Music or WALKMAN.

1 Connect the home audio system and an Xperia to the same network.

Connect the home audio system and your Xperia to the same SSID of the wireless router.
The NETWORK indicator lights up in white when the home audio system is connected to your network.

2 Touch the NETWORK/ ▬ WPS key on the home audio system.

The home audio system enters the NETWORK function.

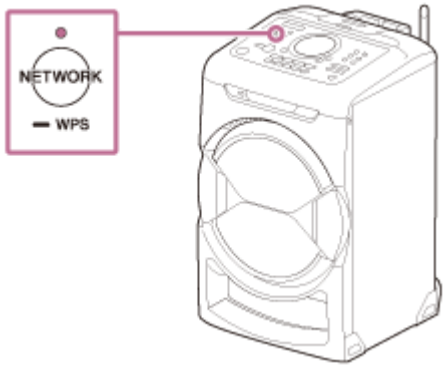

The home audio system can also be switched to the NETWORK function automatically, instead of touching the NETWORK/ ▬ WPS key, by selecting the home audio system in the menu of the Music application on the Xperia, then playing back music.

3 Start up [Music] on your Xperia.

4 **Tap and [MHC-GT7DW] on the Xperia.**

5 **Start playing back music on the Xperia, and adjust the volume.**

Music will be heard from the home audio system.
If playback does not start, perform the process again from step **1** .

To enjoy a more dynamic sound

Place your fingers over the parts ① , then pull the grille of the subwoofer and speakers to remove them.*

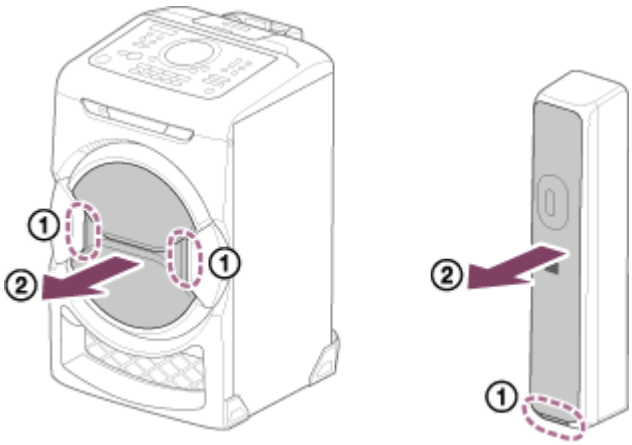

* After removing the grilles, do not touch the exposed part of the subwoofer and speakers, and keep the removed grilles on a flat surface to prevent distortion.

Hint

- Refer to the operating instructions of your Xperia for details.

- For details on the use of the Android OS, refer to Help of Android OS.

4-684-461-11(3) Copyright 2016 Sony Corporation

Home Audio System
MHC-GT7DW

DLNA (Digital Living Network Alliance)

You can listen to music stored in a DLNA server (such as a PC) on a home network using the home audio system.
By connecting DLNA-compatible digital devices with each other on the network, you can play back music stored in a DLNA server by using a DLNA controller.
To use the PC as a DLNA server or controller, it is necessary to set the PC.

To listen to music in a DLNA server (PC, etc.) by operating a smartphone, iPhone, etc.

Download SongPal to your smartphone, iPhone, etc.
This application provides Wi-Fi connection setup with the home audio system, and allows you to select/play music in the DLNA server (such as a PC).
For details, see “Listening to music on a PC via a network (“Sony | Music Center for PC” with SongPal operation).”

To listen to music in a DLNA server using your PC as a controller

You can play back music stored in a DLNA server by operating your PC.
Start Windows Media Player on your PC, then play back music by using the “Play To” function (Windows 8.1/Windows 7).
Follow the instructions on the PC screen to operate.
To use the PC as a DLNA server or controller, it is necessary to set the PC.
For details, see “Setting your PC as a DLNA server and controller (Windows 8.1)/(Windows 7)”, “Listening to music on a PC via a network (Windows Media Player) (Windows 8.1)/(Windows 7)/(“Sony | Music Center for PC”).”

Hint

- You need the DLNA controller to listen to music stored in a Windows Vista PC with the home audio system. For details, refer to the operating instructions of the PC.

Note

- The home audio system can play MP3, Linear PCM, WMA, AAC, WAV, FLAC, ALAC and AIFF format files (only AAC files with the extension “.m4a,” “.mp4,” or “.3gp” are playable). Even if the bit rate and file format are supported, the playback of all files is not guaranteed.
- Files with DRM (Digital Rights Management) copyright protection cannot be played on the home audio system. To check if a WMA file is protected by DRM, right-click the file on the PC.
- When you listen to music via a home network, it may take some time to start, since each DLNA-compatible device has to recognize the component currently used.
- Some content may not be playable with DLNA certified products.

4-684-461-11(3) Copyright 2016 Sony Corporation

Home Audio System
MHC-GT7DW

Connecting to a wired network

This section explains how to connect the home audio system to a wireless router with a LAN cable (not supplied), then how to connect the router to the PC.
Usually the DHCP setting is set to ON when you connect your PC to the network.
Do the following before starting.

- Set the DHCP setting of your PC to ON.

1 Check that your PC and wireless router are turned on.

2 Connect the wireless router to the LAN port of the home audio system with a LAN cable (not supplied).

3 Connect the wireless router to your PC using another LAN cable (not supplied), or a Wi-Fi connection.

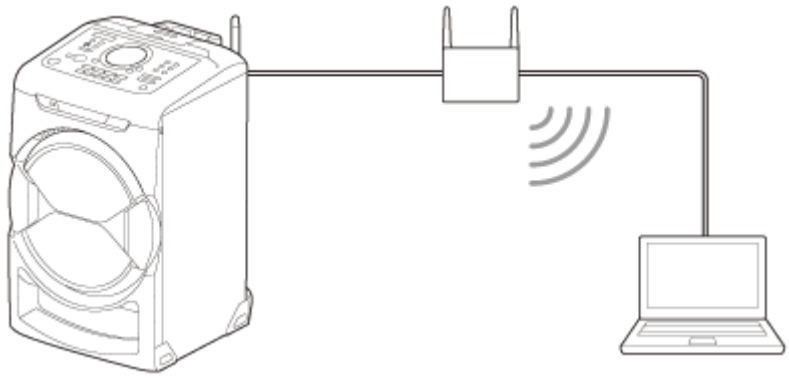

4 Turn the home audio system on.

The power indicator lights up in green, then the NETWORK indicator begins to flash in white. Wait about 2 minutes (in some cases, 4 or 5 minutes) until lights up on the display. When the connection is completed, the NETWORK indicator changes from flashing to staying lit in white.

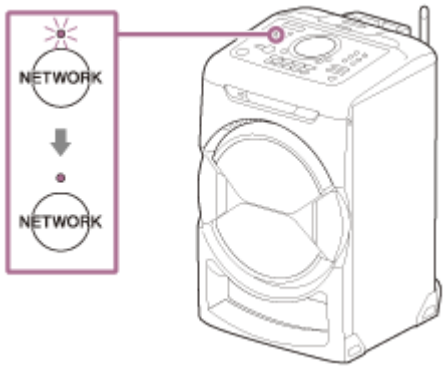

Hint

- When you connect the home audio system to a PC for the first time, it takes about four or five minutes until the NETWORK indicator stops flashing and stays lit in white.

Note

- When you connect the home audio system to a network for the first time after purchase, or after you reset the home audio system, the BLUETOOTH/Network standby mode is turned on automatically.

4-684-461-11(3) Copyright 2016 Sony Corporation

Home Audio System
MHC-GT7DW

Connecting the home audio system to a Wi-Fi network using a PC connected wirelessly (Modern UI)

Note that the home audio system should be reset to the factory default for this connection. All BLUETOOTH device registration (pairing) information is deleted. To use the BLUETOOTH connection after that, delete all pairing information on the PC, and then set pairing again.
This section describes how to connect a Modern UI PC and the home audio system wirelessly, then how to connect the home audio system to a wireless router, using the PC.
Do the following before starting.

- Disconnect the LAN cable (not supplied) from the home audio system.
- Place the home audio system closer to the wireless router.
- Locate the SSID (the name of a wireless network) and encryption key (WEP or WPA), which are required to set up a Wi-Fi network. The encryption key restricts access to devices on a network. It is used to make more secure communication between the devices connected to wireless routers or access points.

1 Have the Wi-Fi network name (SSID) and password (encryption key) of the wireless router available for reference.

For details, refer to the operating instructions supplied with your wireless router.

2 Reset the home audio system by using the remote control.

1. Unplug the AC power cord (mains lead), then plug it back in.
2. Press ⏻ (power) button to turn on the home audio system.
3. Press OPTIONS button.
4. Press ↑ / ↓ button repeatedly to select [SYSTEM], then press + (enter) button.
5. Press ↑ / ↓ button repeatedly to select [RESET], then press + (enter) button.
6. Press ↑ / ↓ button repeatedly to select [YES], then press + (enter) button.
   [RESET] appears on the display.
   The settings of the home audio system return to their factory defaults, and network settings and all BLUETOOTH device registration (pairing) information are deleted.

3 Turn on the home audio system.

The power indicator lights up in green. Wait until the NETWORK indicator flashes in white. It takes about 2 minutes (in some cases, 4 or 5 minutes).

4 Connect the home audio system to the PC.

1. Move the mouse pointer to the top-right (or bottom-right) corner of the Start screen to display the charms, then select [Settings]. In the case of a touch panel, display the charms by swiping from the right side of the screen to the center, then select [Settings].

2. Select or .
3. Select [MHC-GT7DW] from the network list.

5 Display the [Sony Network Device Settings] screen.

1. Launch a browser (Internet Explorer, etc.).
2. Enter the following URL in the address bar.
http://192.168.211.129

6 Select [Network Settings] from the menu.

7 Enter the SSID of the wireless router and the password (encryption key).

8 Select [Apply].

9 **Check that the NETWORK indicator lights up in white.**

When the Wi-Fi connection is completed, the NETWORK indicator lights up in white. It takes about 2 minutes (in some cases, 4 or 5 minutes).

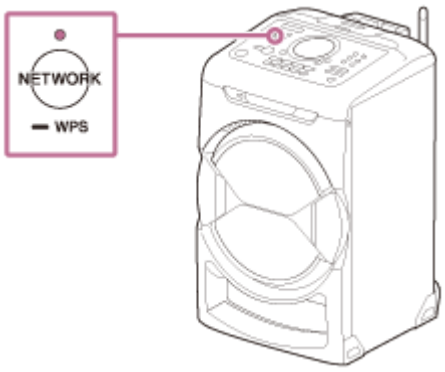

The connection is complete.

10 **Connect the PC to the wireless router to be used.**

Hint

- If you want to set a fixed IP address, set in the screen in step 7 above.
- When the connection of the home audio system to your Wi-Fi network has completed, connect your PC to the previous destination or your wireless router.

Note

- This procedure needs to be completed within 30 minutes. If you cannot complete within 30 minutes, start over from step 2 .
- Until you finish the Wi-Fi network setting, it will not be protected. The Wi-Fi network will be protected again after setting the Wi-Fi security.
- When you connect the home audio system to a Wi-Fi network for the first time after purchase, the BLUETOOTH/Network standby mode is turned on automatically.

4-684-461-11(3) Copyright 2016 Sony Corporation

Home Audio System
MHC-GT7DW

Connecting to a Wi-Fi network using a PC connected wirelessly (Windows 7/Windows 8.1)

Note that the home audio system should be reset to the factory default for this connection. All BLUETOOTH device registration (pairing) information is deleted. To use the BLUETOOTH connection after that, delete all pairing information on the PC, and then set pairing again.
This section describes how to connect a Windows 7 or Windows 8.1 PC and the home audio system wirelessly, then how to connect the home audio system to a wireless router, using the PC.
Do the following before starting.

- Disconnect the LAN cable (not supplied) from the home audio system.
- Place the home audio system closer to the wireless router.
- Locate the SSID (the name of a wireless network) and encryption key (WEP or WPA), which are required to set up a Wi-Fi network. The encryption key restricts access to devices on a network. It is used to make more secure communication between the devices connected to wireless routers and access points.

1 Have the Wi-Fi network name (SSID) and password (encryption key) of the wireless router available for reference.

For details, refer to the operating instructions supplied with your wireless router.

2 Reset the home audio system by using the remote control.

1. Unplug the AC power cord (mains lead), then plug it back in.
2. Press ⏻ (power) button to turn on the home audio system.
3. Press OPTIONS button.
4. Press ▲ / ▼ button repeatedly to select [SYSTEM], then press + (enter) button.
5. Press ▲ / ▼ button repeatedly to select [RESET], then press + (enter) button.
6. Press ▲ / ▼ button repeatedly to select [YES], then press + (enter) button.
   [RESET] appears on the display.
   The settings of the home audio system return to their factory defaults, and network settings and all BLUETOOTH device registration (pairing) information are deleted.

3 Turn on the home audio system.

The power indicator lights up in green. Wait until the NETWORK indicator flashes in white. It takes about 2 minutes (in some cases, 4 or 5 minutes).

4 Connect the home audio system to the PC.

1. For Windows 8.1, click or tap the desktop on the Start screen.
2. Select or on the right-bottom of the screen.

3. Select [MHC-GT7DW] from the network list.

5 Display the [Sony Network Device Settings] screen.

1. Launch a browser (Internet Explorer, etc.).
2. Enter the following URL in the address bar.
   http://192.168.211.129

6 Select [Network Settings] from the menu.

7 Enter the SSID of the wireless router and the password (encryption key).

8 Select [Apply].

9 Check that the NETWORK indicator lights up in white.

When the Wi-Fi connection is completed, the NETWORK indicator lights up in white. It takes about 2 minutes (in some cases, 4 or 5 minutes).

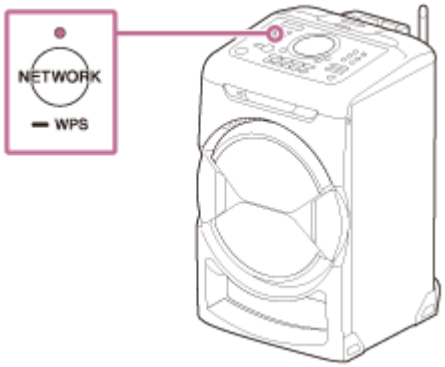

The connection is complete.

10 Connect the PC to the wireless router to be used.

Hint

- If you want to set a fixed IP address, set in the screen in step 7 above.
- When the connection of the home audio system to your Wi-Fi network has completed, connect your PC to the previous destination or your wireless router.

Note

- This procedure needs to be completed within 30 minutes. If you cannot complete within 30 minutes, start over from step 2.
- Until you finish the Wi-Fi network setting, it will not be protected. The Wi-Fi network will be protected again after setting the Wi-Fi security.
- When you connect the home audio system to a Wi-Fi network for the first time after purchase, the BLUETOOTH/Network standby mode is turned on automatically.

4-684-461-11(3) Copyright 2016 Sony Corporation

Connecting to a Wi-Fi network using a PC connected wirelessly (Mac)

Note that the home audio system should be reset to the factory default for this connection. All BLUETOOTH device registration (pairing) information is deleted. To use the BLUETOOTH connection after that, delete all pairing information on the Mac, and then set pairing again.
This section describes how to connect a Mac and the home audio system wirelessly, then how to connect the home audio system to a wireless router, using the Mac.
Do the following before starting.

- Disconnect the LAN cable (not supplied) from the home audio system.
- Place the home audio system closer to the wireless router.
- Locate the SSID (the name of a wireless network) and encryption key (WEP or WPA), which are required to set up a Wi-Fi network. The encryption key restricts access to devices on a network. It is used to make more secure communication between the devices connected to wireless routers and access points.

1 Have the Wi-Fi network name (SSID) and password (encryption key) of the wireless router available for reference.

For details, refer to the operating instructions supplied with your wireless router.

2 Reset the home audio system by using the remote control.

1. Unplug the AC power cord (mains lead), then plug it back in.
2. Press ⏻ (power) button to turn on the home audio system.
3. Press OPTIONS button.
4. Press ↑ / ↓ button repeatedly to select [SYSTEM], then press + (enter) button.
5. Press ↑ / ↓ button repeatedly to select [RESET], then press + (enter) button.
6. Press ↑ / ↓ button repeatedly to select [YES], then press + (enter) button.
   [RESET] appears on the display.
   The settings of the home audio system return to their factory defaults, and network settings and all BLUETOOTH device registration (pairing) information are deleted.

3 Turn on the home audio system.

The power indicator lights up in green. Wait until the NETWORK indicator flashes in white. It takes about 2 minutes (in some cases, 4 or 5 minutes).

4 Connect the home audio system to the Mac.

1. Click ⌔ at the top of the screen.
2. Select [Open Network Preferences...].
3. Select [MHC-GT7DW] from the network list.

5 Display the [Sony Network Device Settings] screen.

1. Launch a browser (Safari, etc.).
2. Enter the following URL in the address bar.
   http://192.168.211.129

6 **Select [Network Settings] from the menu.**

7 **Enter the SSID of the wireless router and the password.**

8 **Select [Apply].**

9 **Check that the NETWORK indicator lights up in white.**

When the Wi-Fi connection is completed, the NETWORK indicator lights up in white. It takes about 2 minutes (in some cases, 4 or 5 minutes).

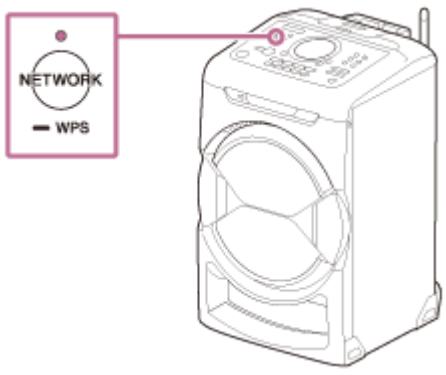

The connection is complete.

10 Connect the Mac to the wireless router to be used.

Hint

- If you want to set a fixed IP address, set in the screen in step 7 above.
- When the connection of the home audio system to your Wi-Fi network has completed, connect your PC to the previous destination or your wireless router.

Note

- This procedure needs to be completed within 30 minutes. If you cannot complete within 30 minutes, start over from step 2 .
- Until you finish the Wi-Fi network setting, it will not be protected. The Wi-Fi network will be protected again after setting the Wi-Fi security.
- When you connect the home audio system to a Wi-Fi network for the first time after purchase, the BLUETOOTH/Network standby mode is turned on automatically.

4-684-461-11(3) Copyright 2016 Sony Corporation

Home Audio System
MHC-GT7DW

Connecting to a Wi-Fi network using an iPhone/iPod touch

Note that the home audio system should be reset to the factory default for this connection. All BLUETOOTH device registration (pairing) information is deleted. To use the BLUETOOTH connection after that, delete all pairing information on the iPhone/iPod touch, and then set pairing again.
If the iPhone/iPod touch is iOS 8 or later, the home audio system can be connected to the same Wi-Fi network as the iPhone/iPod touch. The Wi-Fi network settings of the home audio system are made by the iPhone/iPod touch.
Do the following before starting.

- Disconnect the LAN cable (not supplied) from the home audio system.
- Place the home audio system near the wireless router and the iPhone/iPod touch.
- Make sure that the iPhone/iPod touch is updated to iOS 8 or later.

1 Connect an iPhone/iPod touch to the wireless router.

Connect it to 2.4 GHz band (11b, 11g, and 11n) or 5 GHz band (11a and 11n). The home audio system does not support IEEE 802.11ac.

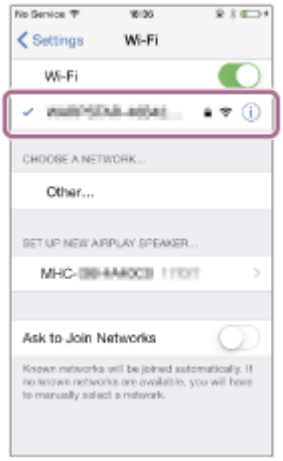

2 Reset the home audio system by using the remote control.

1. Unplug the AC power cord (mains lead), then plug it back in.
2. Press ⏻ (power) button to turn on the home audio system.
3. Press OPTIONS button.
4. Press ↑ / ↓ button repeatedly to select [SYSTEM], then press + (enter) button.
5. Press ↑ / ↓ button repeatedly to select [RESET], then press + (enter) button.
6. Press ↑ / ↓ button repeatedly to select [YES], then press + (enter) button.
   [RESET] appears on the display.
   The settings of the home audio system return to their factory defaults, and network settings and all BLUETOOTH device registration (pairing) information are deleted.

3 Turn on the home audio system.

The power indicator lights up in green. Wait until the NETWORK indicator flashes in white. It takes about 2 minutes (in some cases, 4 or 5 minutes).

4 Search for the home audio system on the iPhone/iPod touch.

1. Tap [Settings].
2. Tap [MHC-GT7DW] from the list.

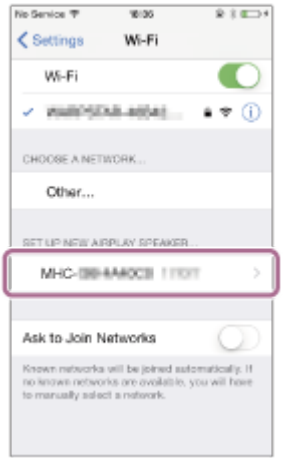

5 Perform the Wi-Fi network settings on the iPhone/iPod touch.

Follow the instructions on the screen.

6 Check that the NETWORK indicator lights up in white.

When the home audio system is connected to the same Wi-Fi network as the iPhone/iPod touch, the NETWORK indicator lights up in white. It takes about 2 minutes (in some cases, 4 or 5 minutes).

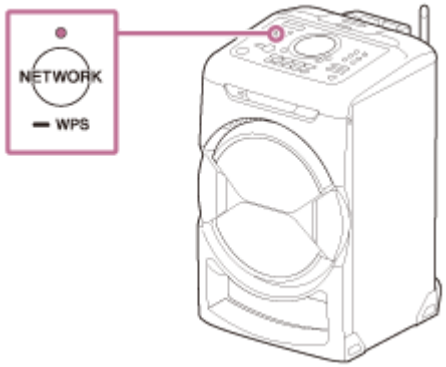

The connection is complete.

Note

- This procedure needs to be completed within 30 minutes. If you cannot complete within 30 minutes, start over from step 2.
- Until you finish the Wi-Fi network setting, it will not be protected. The Wi-Fi network will be protected again after setting the Wi-Fi security.
- When you connect the home audio system to a Wi-Fi network for the first time after purchase, the BLUETOOTH/Network standby mode is turned on automatically.

4-684-461-11(3) Copyright 2016 Sony Corporation

Home Audio System
MHC-GT7DW

Updating the pre-installed software

When a new version of the software is released, you can update your home audio system's pre-installed software by using the following methods.
By updating the software, new features will be added enabling you to experience more convenient and stable use.

- Update method 1: Automatic update via the Internet
  When the home audio system is connected to the Internet, it can detect a new software version and automatically update when you are not using the home audio system. This feature requires home audio system settings to be made.
- Update method 2: Manual update via the Internet
  When the home audio system is connected to the Internet, it can detect a new software version and if found, [UPDATE] lights up on the display to inform you. This is the default setting.
- Update method 3: Manual update via a USB flash drive
  When the home audio system is not connected to the Internet, use a PC or another device to download the update file, then install it to the home audio system.

Hint

- [UPDATE] on the display turns off and the home audio system enters standby mode or BLUETOOTH/Network standby mode automatically when the updating is completed.
  When the home audio system is turned on for the first time after updating, [UPDATED] appears on the display.

4-684-461-11(3) Copyright 2016 Sony Corporation

Update method 1: Automatic update via the Internet

When you use the home audio system while connected to the Internet via a wired or Wi-Fi network, the home audio system can update to the latest software automatically.
This feature is disabled by default.

To update software automatically

- Launch SongPal on your smartphone, iPhone, etc., and set on [System] in the [Settings] menu.
  The automatic software update feature ([Auto Update]) of the home audio system is activated. If [Auto Update] is disabled, change the setting to enable.
- The update is performed when you are not using the home audio system, such as during midnight or when the home audio system is in standby mode. During an update, the information of the update's progress appears on the display, and [UPDATED] appears on the display when the update is complete. When the home audio system is turned on for the first time after updating, [UPDATED] appears on the display.

To deactivate the software automatic update

- Disable [Auto Update] in the [Settings] menu by using SongPal installed on a smartphone, iPhone, etc.
- However, the software may still be updated automatically for critical changes, even if you disable this function.

If [NETWORK ERROR] or [DOWNLOAD ERROR PUSH POWER] appears on the display

The software update has failed.
If the network connection is not reliable, the update may fail before it completes. See the following to update using a USB flash drive.
Manual update via a USB flash drive (when the update via a network has failed)

Hint

- Do not turn the home audio system off during the update.
- When the home audio system is connected to the Internet via a wired or Wi-Fi network, [UPDATE] lights up on the display when the home audio system detects a new software version.
- Regardless of the [Auto Update] setting, [UPDATE] lights up on the display when the home audio system detects a new software version.
- You can update the software manually even when the [Auto Update] setting is activated. See "Update method 2: Manual update via the Internet."

Note

- Updating normally takes 3 to 10 minutes. It may take longer depending on your network environment.
- Do not operate the home audio system or remote control during an update. Also, keep the home audio system connected to the power supply and network while updating.
- While updating via the Internet, you can terminate the update procedure by pressing the ■ (stop) button on the remote control or touching the ■ (stop) key on the home audio system when [DL XX%] appears on the display (This is not always possible). If you cancel the update, [CANCEL] appears on the display and [UPDATE] will stay lit on the display again.

4-684-461-11(3) Copyright 2016 Sony Corporation

Home Audio System
MHC-GT7DW

Update method 2: Manual update via the Internet

When the home audio system is connected to the Internet via a wired or Wi-Fi network, [UPDATE] lights up on the display when the home audio system detects a new software version.

In this case, follow the steps below to update the software to the latest version. Use the remote control to perform the steps below.
When the update starts, any music being played will stop. Also, any BLUETOOTH connection is disconnected.

1. **Press OPTIONS button.**
2. **Press ▲ / ▼ button repeatedly to select [SYSTEM], then press + (enter) button.**
3. **Press ▲ / ▼ button repeatedly to select [UPDATE], then press + (enter) button.**
4. **Press ▲ / ▼ button repeatedly to select [VIA NW], then press + (enter) button.**
5. **Press ▲ / ▼ button repeatedly to select [EXEC], then press + (enter) button.**
6. **Press ▲ / ▼ button repeatedly to select [YES], then press + (enter) button.**

   When updating starts, the information of the update's progress appears on the display. While updating, the home audio system cannot be operated.
   To exit the options menu, press OPTIONS button.
   [UPDATED] appears on the display and the home audio system enters standby mode or BLUETOOTH/Network standby mode automatically when the updating is completed.
   When the home audio system is turned on for the first time after updating, [UPDATED] appears on the display.

If [NETWORK ERROR] or [DOWNLOAD ERROR PUSH POWER] appears on the display

The update has failed.
If the network connection is not reliable, the update may fail before it completes. See the following to update using a USB flash drive.
Manual update via a USB flash drive (when the update via a network has failed)

Hint

- During an update, the information of the update's progress appears on the display, and [UPDATED] appears on the display when the update is complete. Do not turn the home audio system off during the update.

Note

- Updating normally takes 3 to 10 minutes. It may take longer depending on your network environment.

- Do not operate the home audio system during an update. Keep the home audio system connected to the power supply and network while updating.
- While updating via the Internet, you can terminate the update procedure by pressing the ■ (stop) button on the remote control or touching the ■ (stop) key on the home audio system when [DL XX%] appears on the display (This is not always possible). If you cancel the update, [CANCEL] appears on the display and [UPDATE] will stay lit on the display again.

4-684-461-11(3) Copyright 2016 Sony Corporation

Home Audio System
MHC-GT7DW

Update method 3: Manual update via a USB flash drive

You can use a USB flash drive to update the software when the home audio system is not connected to the Internet. Follow the steps below. Use the remote control to perform the steps below.

1. **Stop any music that is being played.**
2. **Press FUNCTION +/– button repeatedly to select [USB].**
3. **Press MEDIA MODE button repeatedly to select [MUSIC].**
4. **Download the update file from the website below, then store it in a USB flash drive.**

   For customers in Latin America:
   http://esupport.sony.com/LA
   For customers in Europe and Russia:
   http://www.sony.eu/support
   For customers in other countries/regions:
   http://www.sony-asia.com/section/support
5. **Connect the USB flash drive to the USB port (inside of the USB REC/PLAY cover) on the home audio system.**
6. **Press OPTIONS button.**
7. **Press ↑ / ↓ button repeatedly to select [SYSTEM], then press + (enter) button.**
8. **Press ↑ / ↓ button repeatedly to select [UPDATE], then press + (enter) button.**
9. **Press ↑ / ↓ button repeatedly to select [VIA USB], then press + (enter) button.**
10. **Press ↑ / ↓ button repeatedly to select [EXEC], then press + (enter) button.**
11. **Press ↑ / ↓ button repeatedly to select [YES], then press + (enter) button.**

    When updating starts, the information of the update's progress appears on the display. While updating, the home audio system cannot be operated.
    To exit the options menu, press OPTIONS button.
    [UPDATED] appears on the display and the home audio system enters standby mode or BLUETOOTH/Network standby mode automatically when the updating is completed.
    When you turn on the home audio system for the first time after an update, [UPDATED] appears on the display.

Hint

- During an update, the information of the update’s progress appears on the display, and [UPDATED] appears on the display when the update is complete. Do not turn the home audio system off during the update.

Note

- When you update using a USB flash drive, the update cannot be stopped. If the USB flash drive is removed or the home audio system is unplugged from the power supply during the update, the home audio system will malfunction.
- Updating normally takes 3 to 10 minutes.
- Do not operate the home audio system during an update. Also, keep the home audio system connected to the power supply while updating.

4-684-461-11(3) Copyright 2016 Sony Corporation

Home Audio System
MHC-GT7DW

Searching for the latest software via a network connection

The home audio system has a function which updates the latest software automatically via a Wi-Fi or wired network. When the latest software is released and the home audio system detects it, [UPDATE] lights up on the display.
To avoid the network trouble by many accessing the network server, the searching timing is differ to each home audio system. You can also check manually if the latest software is released.
This section explains how to check the latest software releasing manually.
Do the following before starting.

- Check that the home audio system is connected to a network.
  Check that the NETWORK indicator lights up in white.
- Check that [UPDATE] on the display lights off.
  If [UPDATE] lights up on the display, the home audio system has already detected the latest software, and you cannot operate the following procedure. Start updating the software.

Use the remote control to perform the steps below.

1. **Press OPTIONS button .**

2. **Press ↑ / ↓ button repeatedly to select [SYSTEM], then press + (enter) button.**

3. **Press ↑ / ↓ button repeatedly to select [UPDATE], then press + (enter) button.**

4. **Press ↑ / ↓ button repeatedly to select [VIA NW], then press + (enter) button.**

5. **Press ↑ / ↓ button repeatedly to select [CHECK], then press + (enter) button.**

   The home audio system starts searching if the latest software is released.*
   To exit the options menu, press OPTIONS button.

6. **Check [UPDATE] on the display as follows.**

   - Lights off: The software of this home audio system is the latest version.
   - Lights up: The latest software is released.
     If you set the function, which updates the home audio system software automatically, to enable by SongPal, the home audio system will update the software while you are not using the home audio system, such as midnight or when the home audio system is in the standby mode.
     When you update the software immediately, update manually.
     For the manual updating method, see “Update method 2: Manual update via the Internet.”
     When updating starts, the playback is stopped and the BLUETOOTH connection is disconnected.

* The checking is finished immediately. Depending on the network environment, it may take time. In this case, wait for about one minute.

4-684-461-11(3) Copyright 2016 Sony Corporation

Home Audio System
MHC-GT7DW

Manual update via a USB flash drive (when the update via a network has failed)

If [NETWORK ERROR] or [DOWNLOAD ERROR PUSH POWER] appears on the display, the software update has failed. In this case, the home audio system will not respond to any operation and no function can be used, except the ⏻ (power) button operation. Follow the procedure below to check the home audio system's condition, then complete the software update with an appropriate method.

1 Press the ⏻ (power) button to turn off the home audio system, and then press it to turn on the home audio system.

2 Wait for about three minutes (or until a network connection is established), then check the information on the display.

- **When [UPDATE] lights up on the display:** The update is not complete, though the home audio system can be used normally. Turn the home audio system off again, then see the following to complete the software update using a USB flash drive.
  Update method 3: Manual update via a USB flash drive
- **When [NETWORK ERROR] or [DOWNLOAD ERROR PUSH POWER] appears on the display (the same status as before turning the home audio system on again):** The update has failed and the home audio system cannot be used. Proceed to the next step to update using a USB flash drive.
  The update procedure is different from "Update Method 3" and the following steps are required. In this case, the update cannot be performed via a network.

3 If [NETWORK ERROR] or [DOWNLOAD ERROR PUSH POWER] appears on the display, follow the procedure below to update.

1. Download the update file from the website below, then store it in a USB flash drive.
   For customers in Latin America:
   http://esupport.sony.com/LA
   For customers in Europe and Russia:
   http://www.sony.eu/support
   For customers in other countries/regions:
   http://www.sony-asia.com/section/support
2. Turn the home audio system off again.
   After turning off the home audio system, complete the following steps until turning on the power again within three minutes.
3. Connect the USB flash drive to ⇽ USB port (inside of the USB REC/PLAY cover) on the home audio system.
4. Turn the home audio system on.
   The information of the update's progress appears on the display and the update starts automatically. [UPDATED] appears on the display and the home audio system enters standby mode or BLUETOOTH/Network standby mode automatically when the updating is completed. When you turn on the home audio system for the first time after an update, [UPDATED] appears on the display.

Hint

- During an update, the information of the update's progress appears on the display, and [UPDATED] appears on the display when the update is complete. Do not turn the home audio system off during the update.

Note

- When you update using a USB flash drive, the update cannot be stopped. If the USB flash drive is removed or the home audio system is unplugged during the update, the home audio system will malfunction.
- Updating normally takes 3 to 10 minutes.
- Do not operate the home audio system during an update. Also, keep the home audio system connected to the power supply and network while updating.

4-684-461-11(3) Copyright 2016 Sony Corporation

Home Audio System
MHC-GT7DW

Important information on software

When using the home audio system with a wireless network, [UPDATE] lights up on the display when the new version of the software is found.
For the timing of auto searching or manual updating methods, see “Searching for the latest software via a network connection.”
For the latest version of the software, refer to the URL below for details.
http://rd1.sony.net/help/has/sl/16/

4-684-461-11(3) Copyright 2016 Sony Corporation